SERVICE-ORIENTED MODELING FRAMEWORK™ (SOMF™)

VERSION 2.1

SERVICE-ORIENTED DISCOVERY AND ANALYSIS MODEL LANGUAGE SPECIFICATIONS

Methodologies Corporation, All Rights Reserved © 2008-2011

TABLE OF CONTENTS

INTRODUCTION 3
About The Service-Oriented Modeling Framework (SOMF) 4
About The Service-Oriented Discovery and Analysis Model 6
NOTATION SECTION 7
Analysis Assets 8
Modeling Spaces 10
Contextual Modeling Connectors 11
Structural Modeling Connectors 13
Cloud Typing Tags 16
EXAMPLES SECTION 17
Analysis Proposition Diagram: Contextual Analysis Model 18
Analysis Proposition Diagram: Structural Analysis Model 22

Methodologies Corporation, All Rights Reserved © 2008-2011

INTRODUCTION

Methodologies Corporation, All Rights Reserved © 2008-2011

ABOUT THE SERVICE-ORIENTED MODELING FRAMEWORK (SOMF)

The service-oriented era has begun. New technologies have emerged to support the "service" notion that signifies, today more than ever, a shift in modern computing whose driving aspects are business imperatives and innovative technological implementations. The service paradigm is not a new concept; however, it emboldens the business perspective of every software development life cycle. Furthermore, unlike the object-oriented approach, which is founded to support modeling of object-based computer programming languages, the service-oriented modeling framework embodies distinct terminology to foster loose coupling of software assets, reuse of software components, acceleration of time-to-market, reduction of organizational expenditure, and more.

SUPPORTING THE SERVICE-ORIENTED MODELING NOTION

Thus, to support service-oriented modeling activities, SOMF depicts the term "service" as a holistic entity that may encapsulate business requirements, and from a technological perspective, is identified with a software component. This organizational software entity, namely a "service" that is subject to modeling activities, may be any software construct that the enterprise owns, such as an application, software system, system software, Web service, software library, store procedure, database, business process, enterprise service bus, object, cloud computing service, and more.

SO WHAT IS SOMF?

SOMF is a model-driven engineering methodology whose discipline-specific modeling language and best practices focus on software design and distinct architecture activities employed during stages in the software development life cycle. Moreover, architects, analysts, modelers, developers, and managers employ SOMF standalone capabilities or mix them with other industry standard modeling languages to enrich the language syntax, set software development priorities during life cycle stages, and enhance the 360º software implementation view.

Methodologies Corporation, All Rights Reserved © 2008-2011

SOMF DISCIPLINES AND MODELS

SOMF offers a 360º view of any software development life cycle, starting at the conceptualization phase, supporting design and architecture activities, and extending modeling best practices for service operations in a production environment. To achieve these underpinning milestones, six distinct software development disciplines offer corresponding models whose language notation guides practitioners as they design, architect, and support a service ecosystem:

1. Service-Oriented Conceptualization Model
2. Service-Oriented Discovery and Analysis Model
3. Service-Oriented Business Integration Model
4. Service-Oriented Logical Design Model
5. Service-Oriented Software Architecture Model
6. Cloud Computing Toolbox Model

MODELING GENERATIONS

SOMF diagrams support three chief modeling generations, each of which depicts a different time perspective of a software life cycle. These views help practitioners to depict business and architectural decisions made at any time during the life span of a software product:

1. *Used-to-Be*. Design and architecture *past state* of a software product and its related environment that were deployed, configured, and operated in production

2. *As-Is*. Design and architecture *current state* of a software product and its corresponding environment that are being operated in production

3. *To-Be*: Design and architecture *future state* of a software product and its associated environment that will be deployed, configured, and operated in production

Methodologies Corporation, All Rights Reserved © 2008-2011

ABOUT THE SERVICE-ORIENTED DISCOVERY AND ANALYSIS MODEL

This specifications document focuses on the Service-Oriented Discovery and Analysis Model language notation whose best practices enable practitioners to ascertain services for a project and help analyze their feasibility and level of contribution to organizational problems. Moreover, use the provided language for discovery and analysis purposes to enable traceability of the software development process, increase software reuse, reduce time-to-market, and control expenditure.

Consider the chief benefits of the Service-Oriented Discovery and Analysis Model language:

- Discovering services for a project or a business initiative
- Founding preliminary contracts between services and related consumers
- Proposing a service-oriented solution
- Establishing service granularity levels
- Providing business and ROI traceability
- Justifying architecture and technological decisions
- Tracing service life span evolution
- Increasing software assets reuse
- Abstracting technologies and architectural capabilities
- Enabling technological traceability
- Categorizing services according to their technical or business affiliations
- Depicting service internal architecture structure
- Illustrating external service architecture
- Defining coupling aspects between services and consumers

Methodologies Corporation, All Rights Reserved © 2008-2011

NOTATION SECTION

Methodologies Corporation, All Rights Reserved © 2008-2011

ANALYSIS ASSETS

Figure 1 illustrates analysis assets that are subject to discovery and examination activities that take place during the discovery and analysis phase of a project. This phase of the modeling effort is dedicated to exploring services' capabilities and feasibility to justify their existence in a service ecosystem. These analysis assets, whether a standalone entity such as an analysis atomic service, or a group of services akin to the analysis service cluster or analysis cloud, may play significant roles in a solution to organizational concerns.

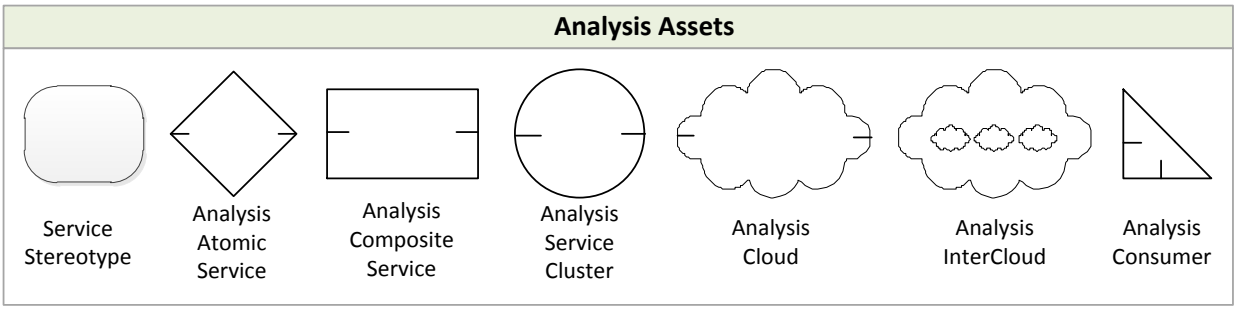

FIGURE 1: ANALYSIS ASSETS

- *Service Stereotype.* A generic service that does not identify any particular service structure pattern
- *Analysis Atomic Service.* A fine-grained service that is impractical to decompose because of its suggested limited capabilities or processes
- *Analysis Composite Service.* A coarse-grained service comprised of internal fine-grained atomic or composite services, forming hierarchical parent-child associations
- *Analysis Service Cluster.* An association of services grouped by related business or technical processes that collaborate to offer solutions
- *Analysis Cloud.* Represents a collection of analysis services in three different categories: Software as Service (SaaS), Platform as Service (PaaS), and Infrastructure as Service (IaaS). Additional types can be added on demand

Methodologies Corporation, All Rights Reserved © 2008-2011

- *Consumer.* Any entity that is identified with service consumption activities. This definition may include consuming applications or services
- *InterCloud.* Represents the term "cloud-of- clouds." A superior cloud that identifies a group of related clouds, working together to offer collaborative solutions

Methodologies Corporation, All Rights Reserved © 2008-2011

MODELING SPACES

A modeling space (illustrated in Figure 2) is a defined area in which modeling activities take place. This area also identifies boundaries of organizations, and containment scope of services, service clusters, or cloud computing environments.

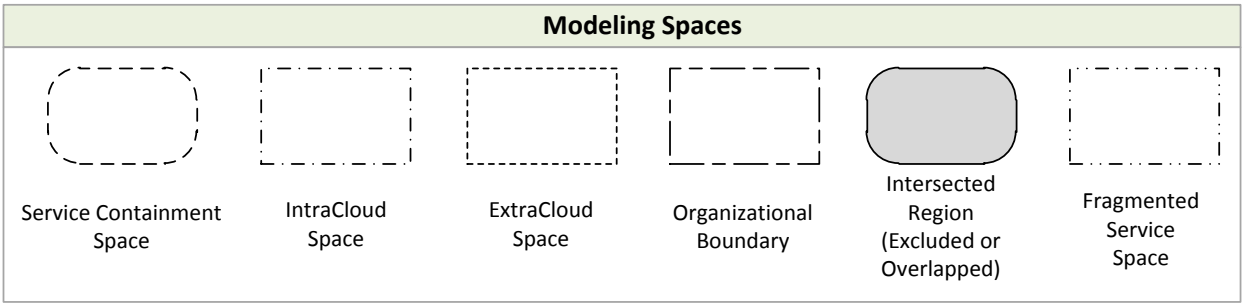

FIGURE 2: MODELING SPACES

- *Service Containment Space.* An area that identifies the aggregated child services contained in a parent composite service or service cluster. This space can also define any collaboration of grouped services that are gathered to offer a solution
- *IntraCloud Space.* A modeling area that depicts services that operate in a cloud
- *ExtraCloud Space.* A modeling area that depicts services that operate outside of a cloud
- *Organizational Boundary.* A computing area of an organization, such as a division, department, company, partner company, consumer, or community
- *Intersected Region.* A common space to two or more intersecting composite, compounded, cluster, or cloud entities
- *Fragmented Service Space.* A modeling space that is dedicated to a service that has been decomposed into smaller services and then retired

Methodologies Corporation, All Rights Reserved © 2008-2011

CONTEXTUAL MODELING CONNECTORS

The term "Contextual Modeling" pertains to modeling activities performed on an analysis asset or its corresponding environment to assess and adjust their capabilities, or discover additional services. Alteration to service responsibilities, operational scope, or consumer scale can also be pursued during the contextual modeling process. Use the depicted connectors in Figure 3 to generalize, specify, expand, or contract a service, service environment, or architecture scope.

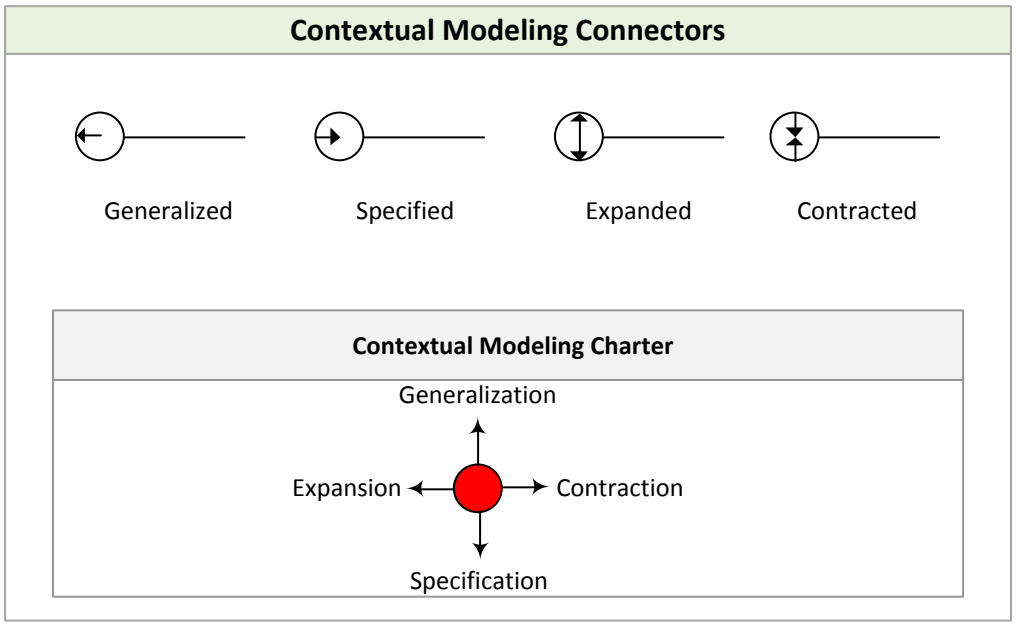

FIGURE 3: CONTEXTUAL MODELING CONNECTORS AND CHARTER

- *Generalized.* A modeling activity that is performed on a service to raise its abstraction level and increase its scope of operations and capabilities
- *Specified.* A modeling activity that is performed on a service to reduce its abstraction level and decrease its scope of operations and capabilities
- *Expanded.* A modeling activity that is performed on a service's environment to expand the architecture and technology capabilities

Methodologies Corporation, All Rights Reserved © 2008-2011

- *Contracted.* A modeling activity that is performed on a service's environment to reduce the architecture and technology capabilities

Methodologies Corporation, All Rights Reserved © 2008-2011

STRUCTURAL MODELING CONNECTORS

Use the connectors that are illustrated in Figure 4 to perform structural manipulation of an *analysis asset*, such as an atomic service, composite service, service cluster, or cloud of services. Furthermore, structural alterations can be performed to the environments in which these modeling entities operate. The changes to these internal and external structures should be pursued to discover services, analyze their feasibility, and propose a superior solution to organizational problems.

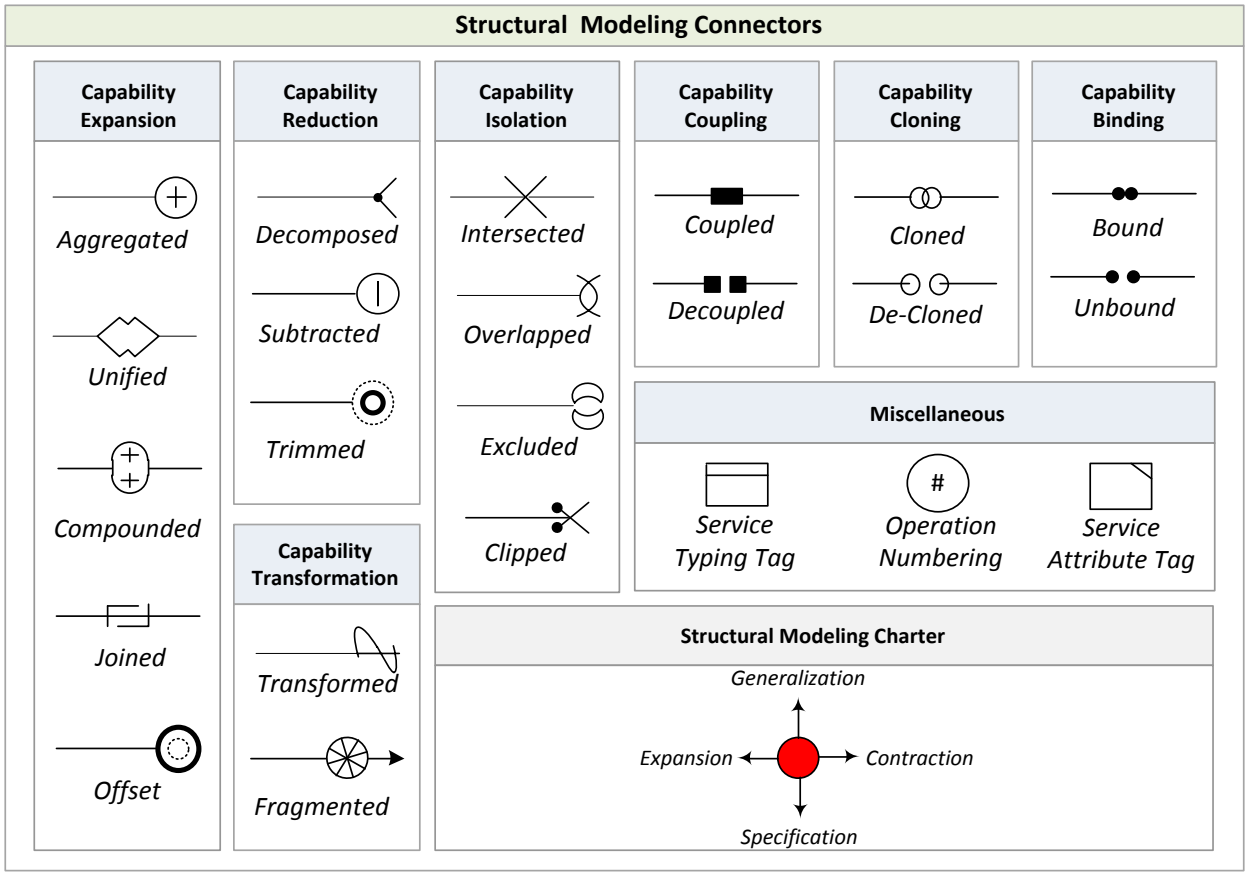

FIGURE 4: STRUCTURAL MODELING CONNECTORS AND CHARTER

Methodologies Corporation, All Rights Reserved © 2008-2011

- *Aggregated.* Inserts a fine-grained analysis asset into a coarse-grained analysis asset
- *Unified.* Merges two or more analysis assets into a single analysis asset
- *Compounded.* Groups two or more analysis assets to collaborate on providing a solution
- *Joined.* Joins two analysis assets to provide permanent or temporary solutions
- *Offset.* Increases the structural scale of an analysis asset
- *Decomposed.* Separates an analysis asset from another analysis asset
- *Subtracted.* Retires an analysis asset
- *Trimmed.* Reduces the structural scale of an analysis asset
- *Transformed.* Converts a structure of an analysis asset to a different structure
- *Fragmented.* Breaks down an analysis asset into smaller finer-grained analysis assets. The source entity then retires
- *Intersected.* Intersects two analysis assets
- *Overlapped.* Identifies common analysis assets that reside in an overlapped region of intersected analysis assets
- *Excluded.* Identifies uncommon analysis assets that reside in an overlapped region of intersected analysis assets
- *Clipped.* Extracts analysis assets that are aggregated in composite, cluster, cloud, or compounded service formations
- *Coupled.* Links two analysis assets

Methodologies Corporation, All Rights Reserved © 2008-2011

- *De-Coupled.* Unlinks two analysis assets
- *Cloned.* Duplicates an analysis asset
- *De-Cloned.* Unties cloned relationship between two analysis assets
- *Bound.* Establishes a formal contract between two analysis assets
- *Unbound.* Cancels a contract between two or more analysis assets
- *Service Typing Tag.* Classifies a services based on technical or business categories
- *Operation Numbering Tag.* Identifies the modeling operation sequence
- *Service Attribute Tag.* Indicates a service's attributes

Methodologies Corporation, All Rights Reserved © 2008-2011

CLOUD TYPING TAGS

If a project or an architecture initiative involves cloud computing modeling activities, any individual cloud may require typing. The term "typing" pertains to cloud categorization to help understand the design model that is applied to a production environment. Tagging a cloud by the proper tag (illustrated in Figure 5) would also indicate the form of consumers that are allowed to utilize a cloud facility and its offered services.

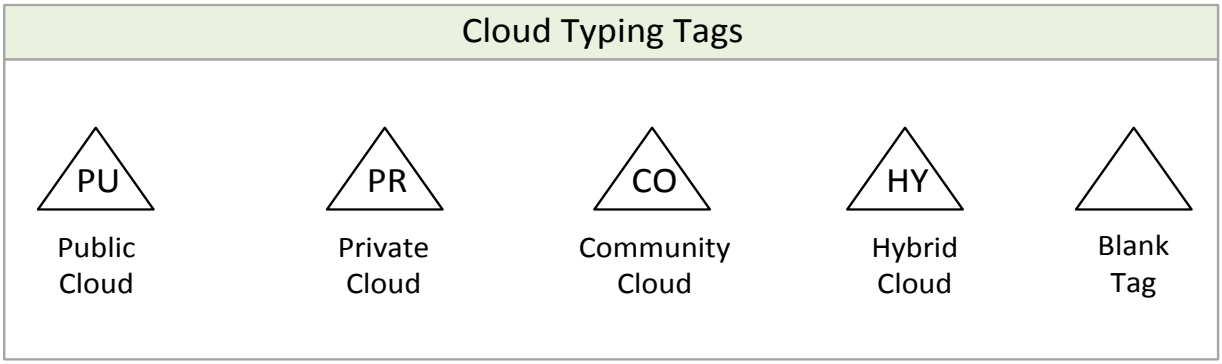

FIGURE 5: CLOUD TYPING TAGS

- *Public Cloud Tag.* Identifies a cloud that is maintained by an off-site party service provider, which offers configurable features and deployments charged to subscribed Internet consumers
- *Private Cloud Tag:* Indicates a cloud of services that is sponsored, maintained, and operated by an organization, available only on private networks, and is utilized exclusively by internal consumers
- *Community Cloud Tag.* Identifies a cloud whose services are consumed by two or more organizations that share similar business or technical requirements
- *Hybrid Cloud Tag.* Depicts a cloud that combines the properties of two or more cloud types described on this list
- *Blank Tag.* Enables other cloud definitions that are not part of this list

Methodologies Corporation, All Rights Reserved © 2008-2011

EXAMPLES SECTION

Methodologies Corporation, All Rights Reserved © 2008-2011

ANALYSIS PROPOSITION DIAGRAM: CONTEXTUAL ANALYSIS MODEL

Create a Contextual Analysis Model to communicate a semantic alteration to a service or to its related operating environment. The term "semantic alteration" implies that the modification to an analysis asset, whether it is an atomic service, composite service, service cluster, or cloud of services, influences its scope of operations, scale of responsibilities, or range of its client base. A Contextual Analysis Model can illustrate four different modeling directions:

1. *Contextual Generalization*. Raises the abstraction level of an analysis asset
2. *Contextual Specification*. Reduces the abstraction level of an analysis asset
3. *Contextual Expansion*. Widens the influence and scope of operations and capabilities of an analysis asset in the organization
4. *Contextual Contraction*. Trims the influence and scope of operations and capabilities of an analysis asset in the organization

CONTEXTUAL MODELING DIAGRAM COMPONENTS (FIGURE 6)

a. Services: Order Entry Atomic Service, Accounting Atomic Service
b. Connector: Generalized

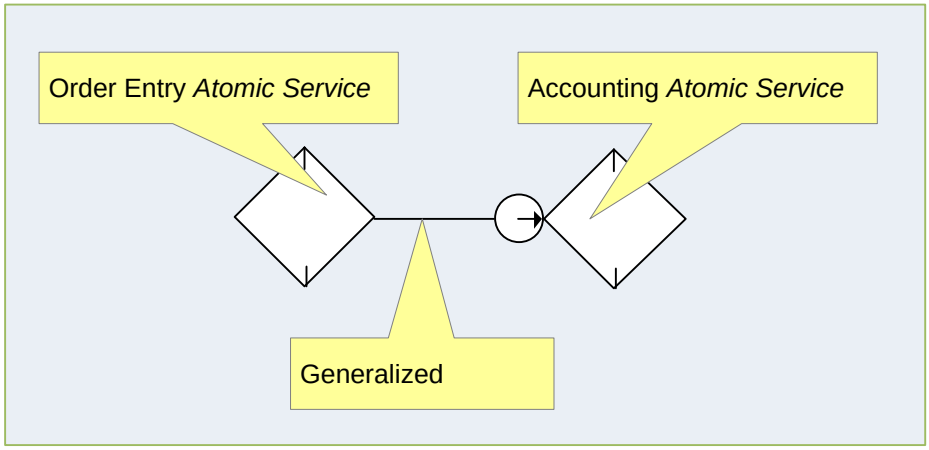

FIGURE 6: CONTEXTUAL MODEL DIAGRAM USING THE "GENERALIZED" CONNECTOR

Methodologies Corporation, All Rights Reserved © 2008-2011

CONTEXTUAL MODELING DIAGRAM COMPONENTS (FIGURE 7)

a. Services: Accounts Payable Atomic Service, Accounting Atomic Service
b. Connector: Specified

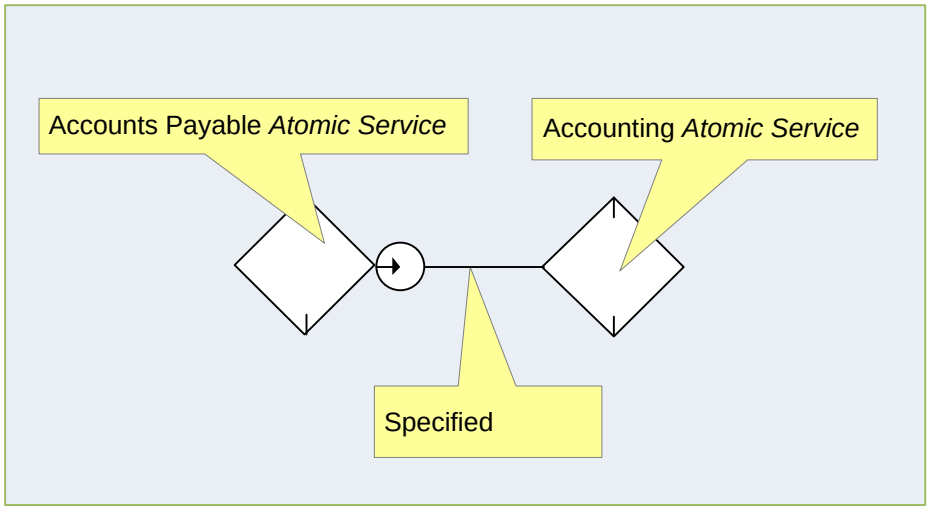

FIGURE 7: CONTEXTUAL MODELING DIAGRAM
USING THE "SPECIFIED" CONNECTOR

Methodologies Corporation, All Rights Reserved © 2008-2011

CONTEXTUAL MODELING DIAGRAM COMPONENTS (FIGURE 8)

a. Organizational boundaries: Loan Department, Enterprise Banking Division
b. Service: Loan Calculator Composite Service
c. Connector: Expanded

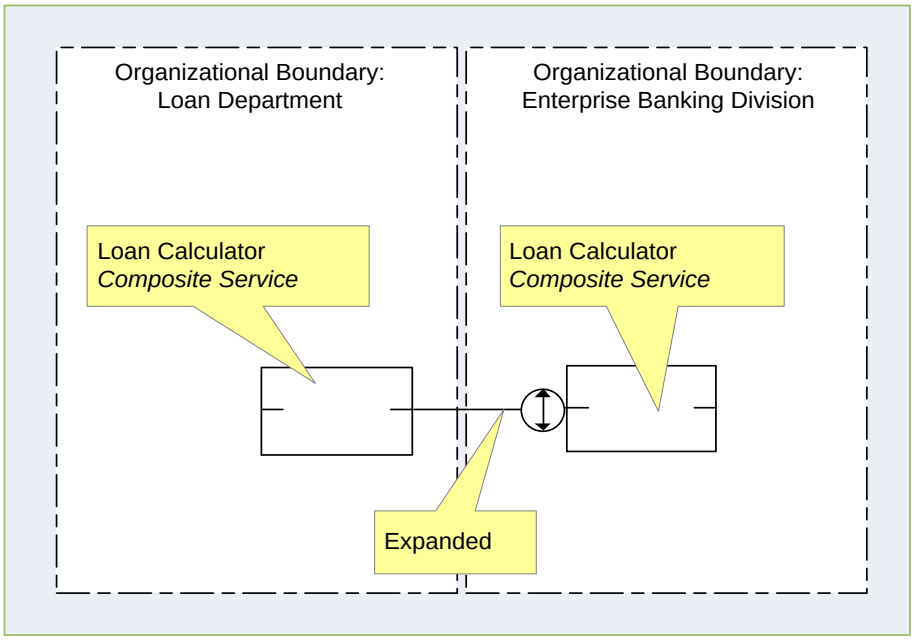

FIGURE 8: CONTEXTUAL MODELING DIAGRAM
USING THE "EXPANDED" CONNECTOR
ACROSS TWO ORGANIZATIONAL BOUNDARIES

Methodologies Corporation, All Rights Reserved © 2008-2011

CONTEXTUAL MODELING DIAGRAM COMPONENTS (FIGURE 9)

a. Service Containment Spaces: Customer Records Department Web Services Group, Customer Records Division Web Services Group
b. Service: Account Lookup Composite Service
c. Connector: Contracted

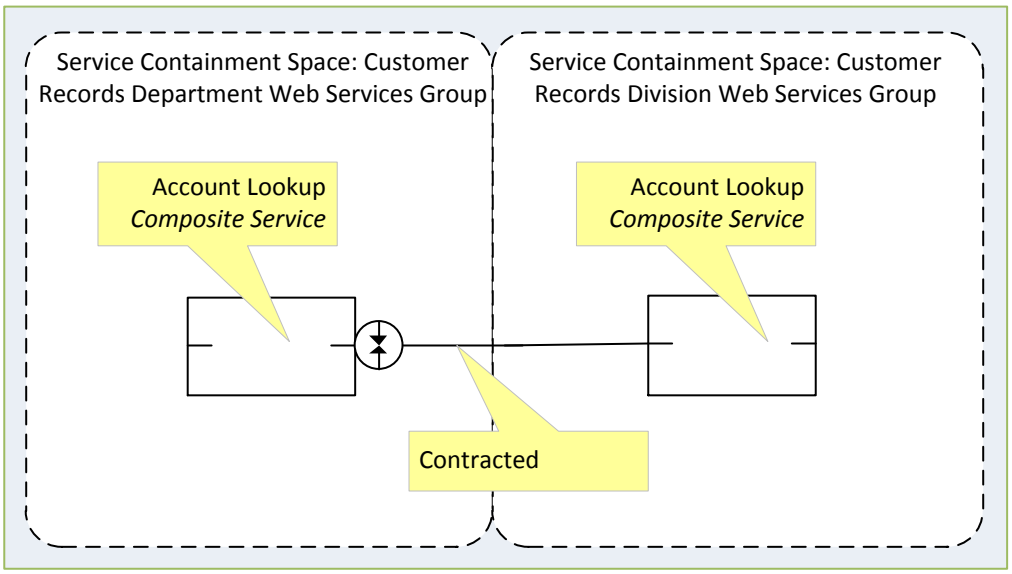

FIGURE 9: CONTEXTUAL MODELING DIAGRAM USING THE "CONTRACTED" CONNECTOR ACROSS TWO SERVICE CONTAINMENT SPACES

Methodologies Corporation, All Rights Reserved © 2008-2011

ANALYSIS PROPOSITION DIAGRAM: STRUCTURAL ANALYSIS MODEL

Create a Structural Analysis Model to communicate structural modifications to an analysis asset, whether it is an atomic service, composite service, service cluster, or cloud of services. The term "structural modification" pertains to a logical or physical state alteration of an analysis asset. This transformation typically renders design and architecture changes of an analysis asset and its corresponding operating environment. A Structural Analysis Model illustrates four distinct directions of a modeling effort:

1. *Structural Generalization.* Extends the capabilities and processes of an analysis asset across an organization by altering its logical or physical structure
2. *Structural Specification.* Reduces the capabilities and processes of an analysis asset and trims its scope in a production environment by altering its logical or physical structure
3. *Structural Expansion.* Widens the scope of an architectural environment within an organization
4. *Structural Contraction*. Trims the scope of an architectural environment within an organization

Methodologies Corporation, All Rights Reserved © 2008-2011

STRUCTURAL ANALYSIS MODEL COMPONENTS (FIGURE 10)

a. Services: composite service CO-1, atomic service A-1
b. Connector: Aggregated

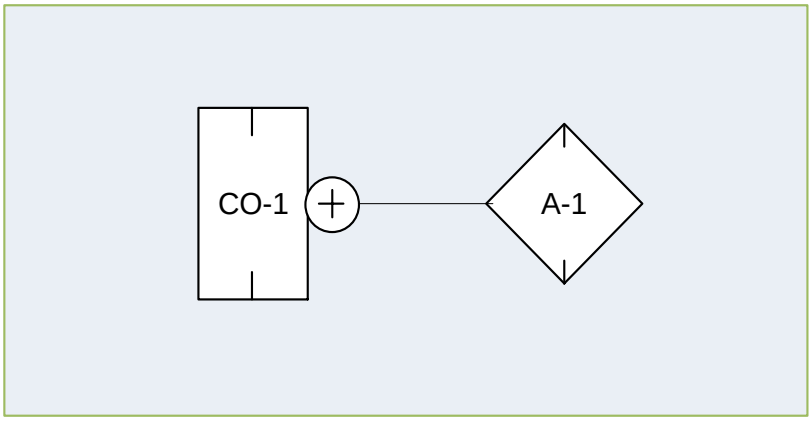

FIGURE 10: A-1 IS AGGREGATED IN CO-1

Methodologies Corporation, All Rights Reserved © 2008-2011

STRUCTURAL ANALYSIS MODEL COMPONENTS (FIGURE 11)

a. Services: composite service CO-1, atomic service A-1
b. Connector: Decomposed

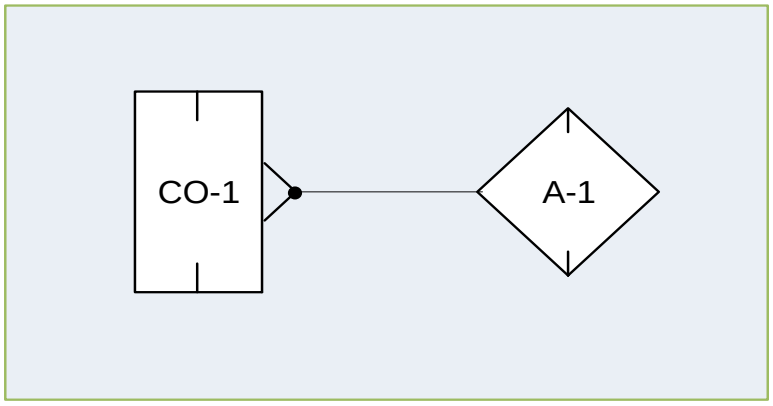

FIGURE 11: A-1 IS DECOMPOSED FROM CO-1
TO ENABLE ARCHITECTURE OR BUSINESS TRACEABILITY

Methodologies Corporation, All Rights Reserved © 2008-2011

STRUCTURAL ANALYSIS MODEL COMPONENTS (FIGURE 12)

a. Services: atomic services A-1 and A-2
b. Connector: Coupled

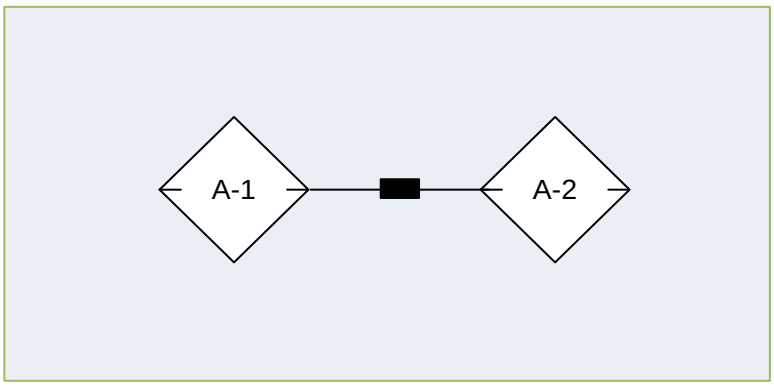

FIGURE 12: A-1 IS COUPLED WITH A-2

Methodologies Corporation, All Rights Reserved © 2008-2011

STRUCTURAL ANALYSIS MODEL COMPONENTS (FIGURE 13)

a. Services: atomic services A-1 and A-2
b. Connector: Decoupled

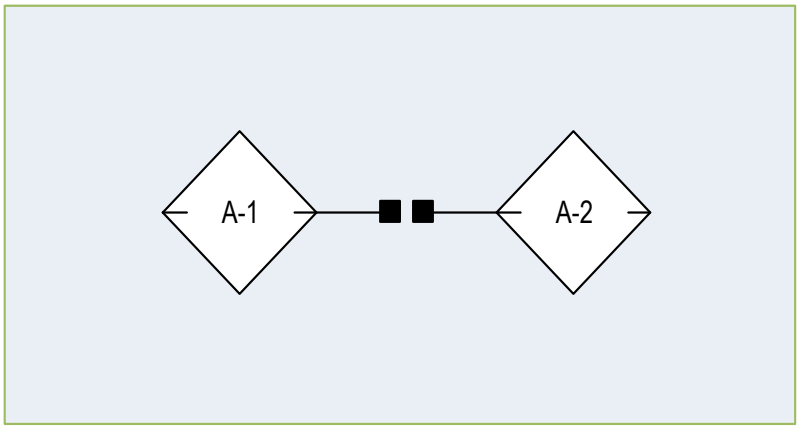

FIGURE 13: A-1 AND A-2 ARE DECOUPLED
TO ENABLE BUSINESS OR ARCHITECTURE TRACEABILITY

Methodologies Corporation, All Rights Reserved © 2008-2011

STRUCTURAL ANALYSIS MODEL COMPONENTS (FIGURE 14)

a. Services: atomic services A-1 and A-2, composite service CO-1
b. Connector: Compounded

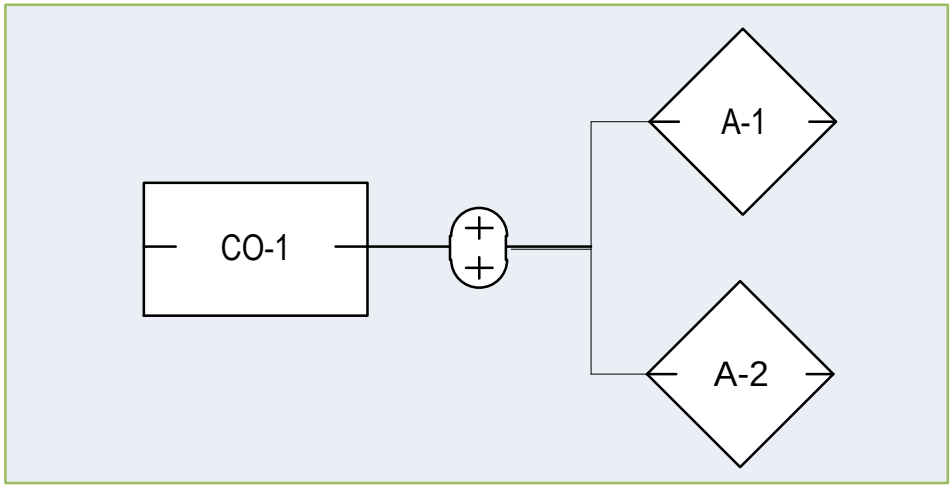

FIGURE 14: A-1, A-2, AND CO-1 ARE COMPOUNDED

Methodologies Corporation, All Rights Reserved © 2008-2011

STRUCTURAL ANALYSIS MODEL COMPONENTS (FIGURE 15)

a. Services: atomic services A-1, A-2, and unified A12
b. Connector: Unified

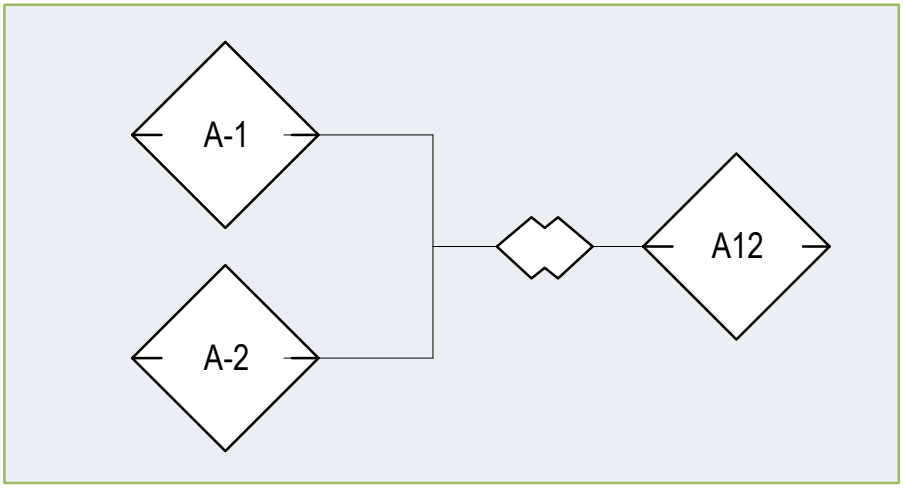

FIGURE 15: A-1 AND A-2 ARE UNIFIED INTO A12

Methodologies Corporation, All Rights Reserved © 2008-2011

STRUCTURAL ANALYSIS MODEL COMPONENTS (FIGURE 16)

a. Services: clusters CLU-1 and CLU-2, atomic services A-1 and A-2
b. Connectors: Intersected and Overlapped

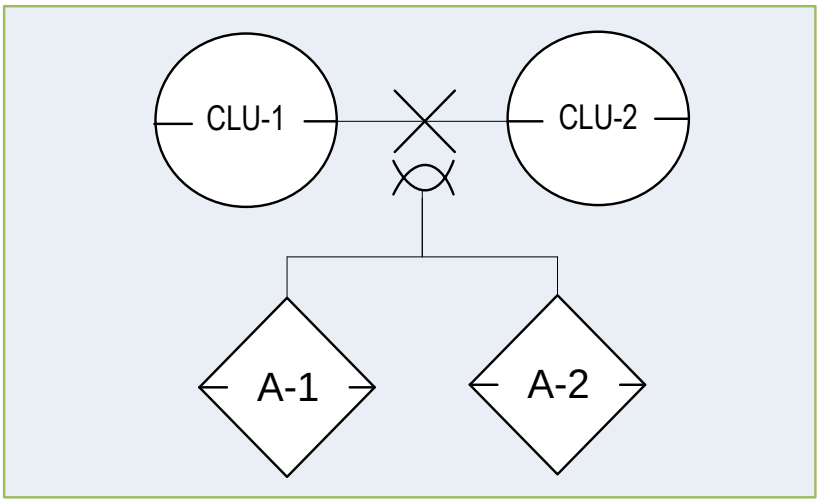

FIGURE 16: CLU-1 AND CLU-2 ARE INTERSECTED, A-1 AND A-2 RESIDE IN THE OVERLAPPED REGION

Methodologies Corporation, All Rights Reserved © 2008-2011

STRUCTURAL ANALYSIS MODEL COMPONENTS (FIGURE 17)

a. Service/Consumer: atomic service A-1, consumer CON-1
b. Connector: Bound

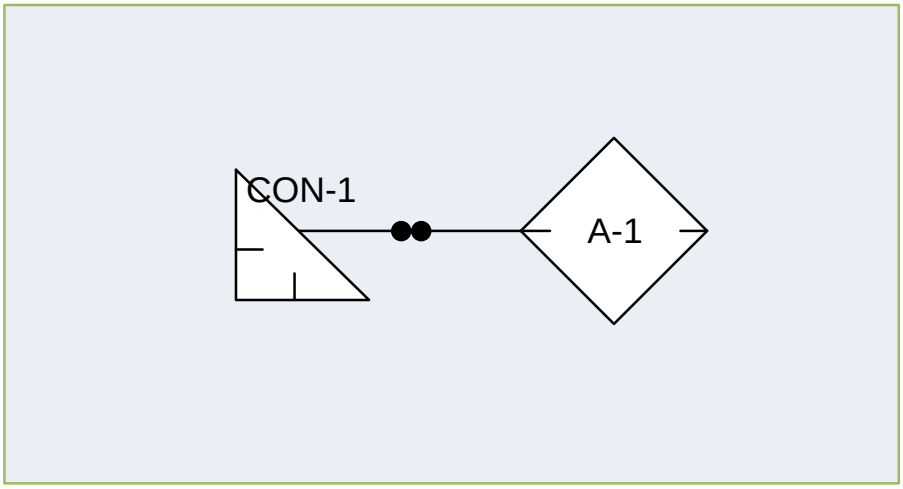

FIGURE 17: CON-1 AND A-1 ARE BOUND BY A CONTRACT

Methodologies Corporation, All Rights Reserved © 2008-2011

STRUCTURAL ANALYSIS MODEL COMPONENTS (FIGURE 18)

a. Services: composite service CO-1, atomic service A-1
b. Connector: Joined

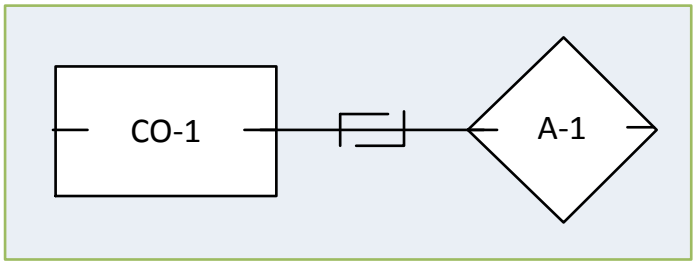

FIGURE 18: CON-1 AND A-1 ARE JOINED

Methodologies Corporation, All Rights Reserved © 2008-2011

STRUCTURAL ANALYSIS MODEL COMPONENTS (FIGURE 19)

a. Service: atomic service A-1
b. Connector: Offset

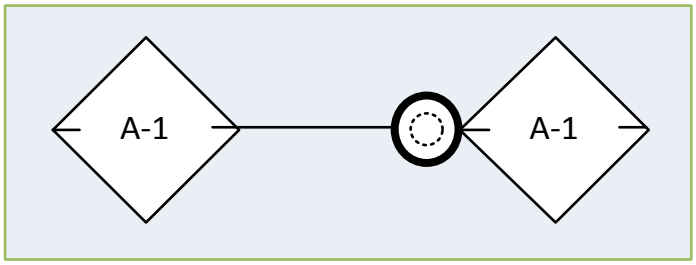

FIGURE 19: THE STRUCTURE OF A-1 IS OFFSET

Methodologies Corporation, All Rights Reserved © 2008-2011

a. Service: atomic service A-1
b. Connector: Trimmed

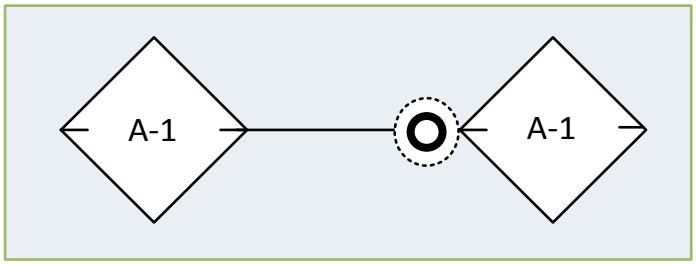

FIGURE 20: THE STRUCTURAL SCALE OF A-1 IS REDUCED

Methodologies Corporation, All Rights Reserved © 2008-2011

STRUCTURAL ANALYSIS MODEL COMPONENTS (FIGURE 21)

a. Fragmented service space contains:
   i. Atomic services A-1, A-2, and A-3
b. Services: composite service CO-1
c. Connectors: Fragmented, Subtracted
d. Operations: 1) CO-1 is fragmented 2) CO-1 is subtracted (retired)

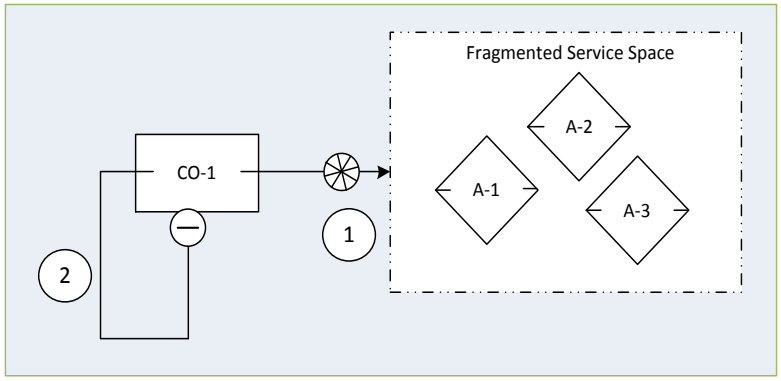

FIGURE 21: CO-1'S STRUCTURE IS FRAGMENTED PRODUCING A-1, A-2, AND A-3

Methodologies Corporation, All Rights Reserved © 2008-2011

STRUCTURAL ANALYSIS MODEL COMPONENTS (FIGURE 22)

a. Service Containment Space Accounting Composite Service contains:
   i. Services: composite service CO-1, atomic services A-1, A-2, and A-3
   ii. Connectors: Decomposed, Decoupled, Transformed
   iii. Operations: 1) Service decomposition, 2) Service decomposition 3) Service transformation
b. Outside consumer: CON-1
c. Consumer CON-1 is bound by a contract (using the Bound connector) to the Accounting Composite Service

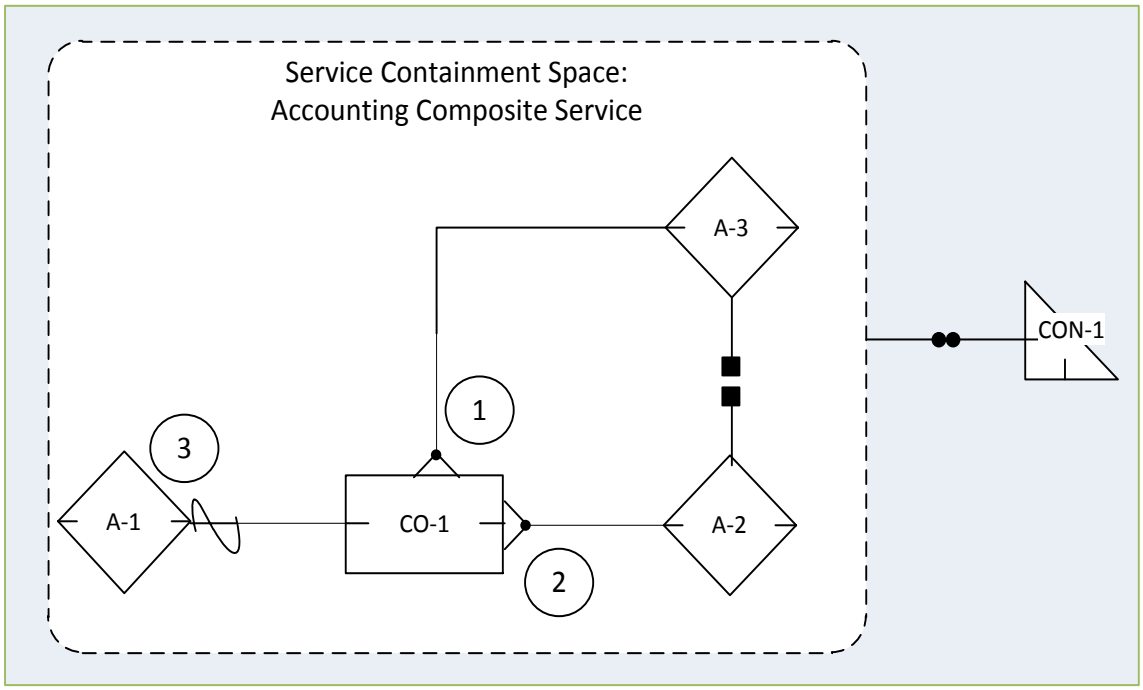

FIGURE 22: CON-1 IS BOUND BY A CONTRACT TO ACCOUNTING COMPOSITE SERVICE

Methodologies Corporation, All Rights Reserved © 2008-2011

STRUCTURAL ANALYSIS MODEL COMPONENTS (FIGURE 23)

a. IntraCloud Space Public Cloud contains:
   i. Services: service clusters CLU-1 and CLU-2, composite service CO-1
   ii. Connectors: Bound
b. Extracloud Space contains:
   i. Services/Consumers: composite service CO-2, atomic service A-1, and consumers CONS-1 and CONS-2
   ii. Connectors: Bound, Aggregated, Decompose
c. IntraCloud Space is linked to the ExtraCloud Space by the contract formed between service cluster CLU-2 and atomic service CO-2

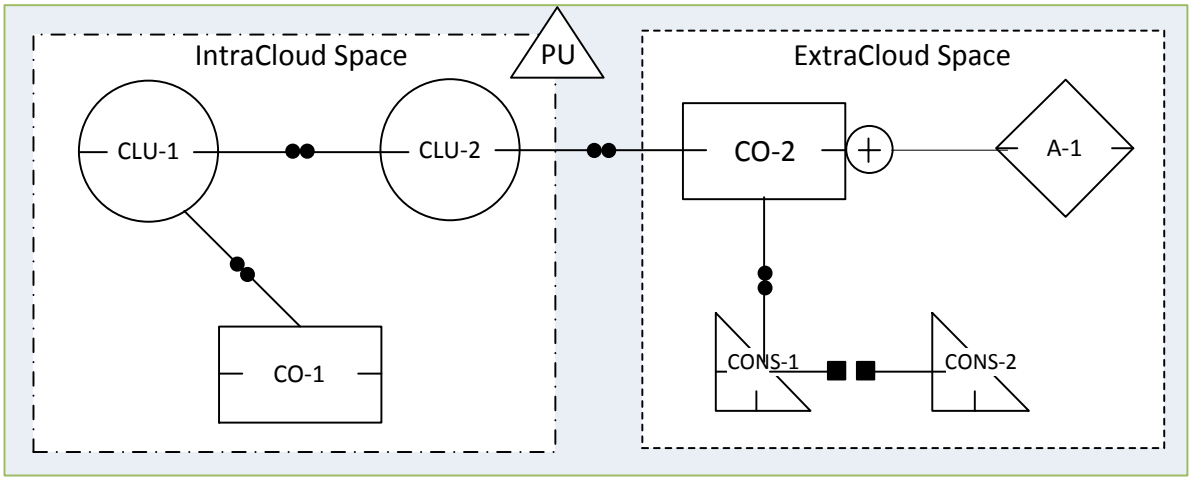

FIGURE 23: LINKING INTRACLOUD SPACE PUBLIC CLOUD TO EXTRACLOUD SPACE

Methodologies Corporation, All Rights Reserved © 2008-2011

STRUCTURAL ANALYSIS MODEL COMPONENTS (FIGURE 24)

a. Clouds: Hybrid Cloud CLO-1, Private Cloud CLO-2
b. Connector: cloud CLO-1 and CLO-2 are intersected by using the Intersected connector
c. Overlapping region contains:
    i. Services: service cluster CLU-1, composite service CO-1, atomic services A-1 and A-2 aggregated into CO-1
b. Connectors: Overlapped, Coupled, Aggregated

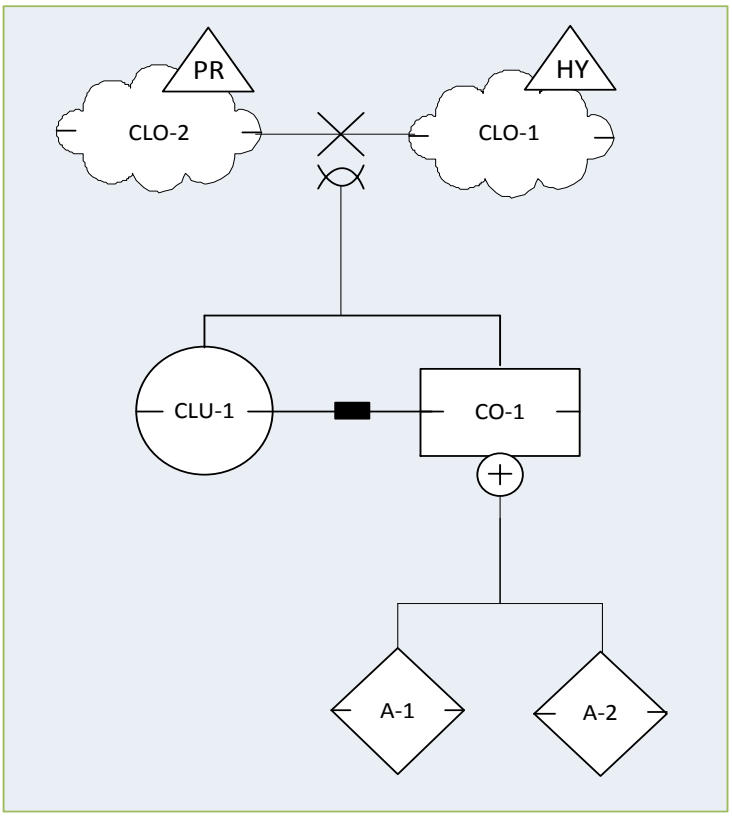

FIGURE 24: AN OVERLAPPING REGION FORMED BY THE INTERSECTION OF CLO-1 AND CLO-2

Methodologies Corporation, All Rights Reserved © 2008-2011

STRUCTURAL ANALYSIS MODEL COMPONENTS (FIGURE 25)

a. Cloud: Hybrid Cloud CLO-1
b. Cloud CLO-1 structure contains:
    i. Service clusters: CLU-1 and CLU-2
    ii. Services: composite service CO-3, atomic service A-1
c. Cluster CLU-1 contains:
    a. Services: atomic service A-2, composite service CO-1
d. Composite service CO-2 is subtracted from cloud CLO-1
e. Connectors: Aggregated, Subtracted

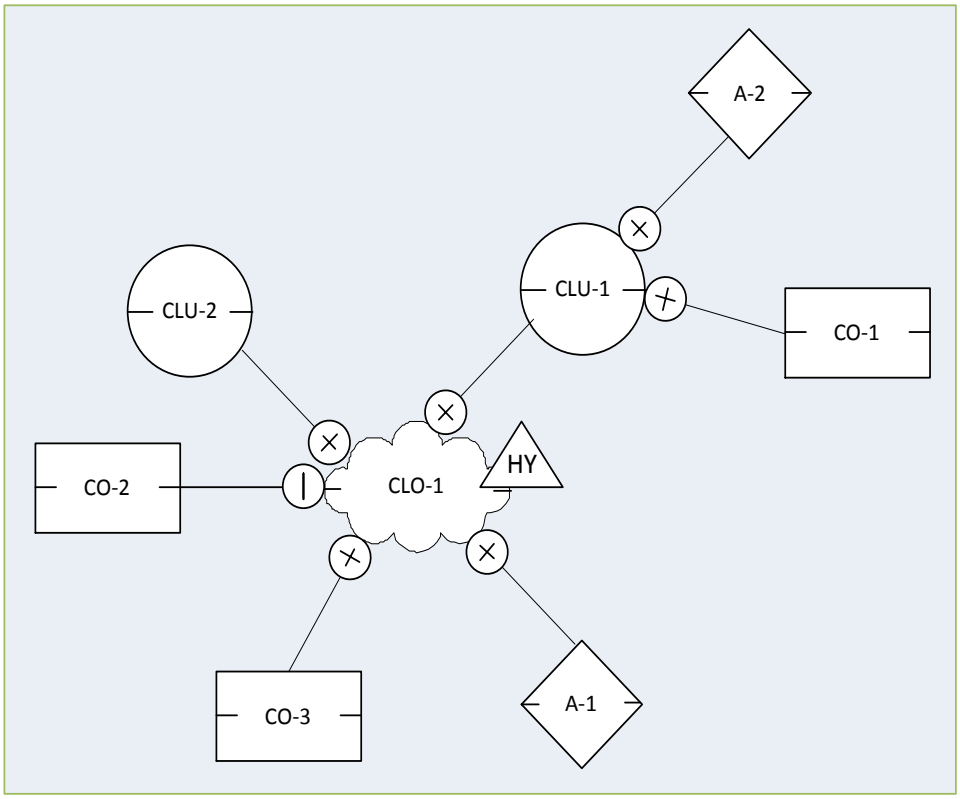

FIGURE 25: AGGREGATION AND SUBTRACTION OPERATIONS ON CLOUD CLO-1

Methodologies Corporation, All Rights Reserved © 2008-2011

STRUCTURAL ANALYSIS MODEL COMPONENTS (FIGURE 26)

a. Organizational Boundary Public Cloud Inc. contains:
    a. Space: IntraCloud Space Public Cloud
    b. Services: atomic service A-1, composite service CO-2
    c. Connector: Aggregated
b. IntraCloud Space Public Cloud contains:
    a. Services: composite service CO-1, service cluster CLU-1
    b. Connectors: Aggregated
c. Service cluster CLU-1 is linked to composite service CO-2 by the Bound connector in the Organizational Boundary Space Public Cloud Inc.
d. Organizational Boundary Space New York Computers Inc. contains:
    a. Cloud: Private Cloud
    b. Service: composite service CO-3
e. Private Cloud in the Organizational Boundary Space New York Computers Inc. contains:
    a. Services: service cluster CLU-2, composite service CO-4
    b. Connectors: Aggregated
f. Composite service CO-5 is decomposed from Private Cloud
g. Composite services CO-3 and CO-4 are bound by a contract by the Bound connector

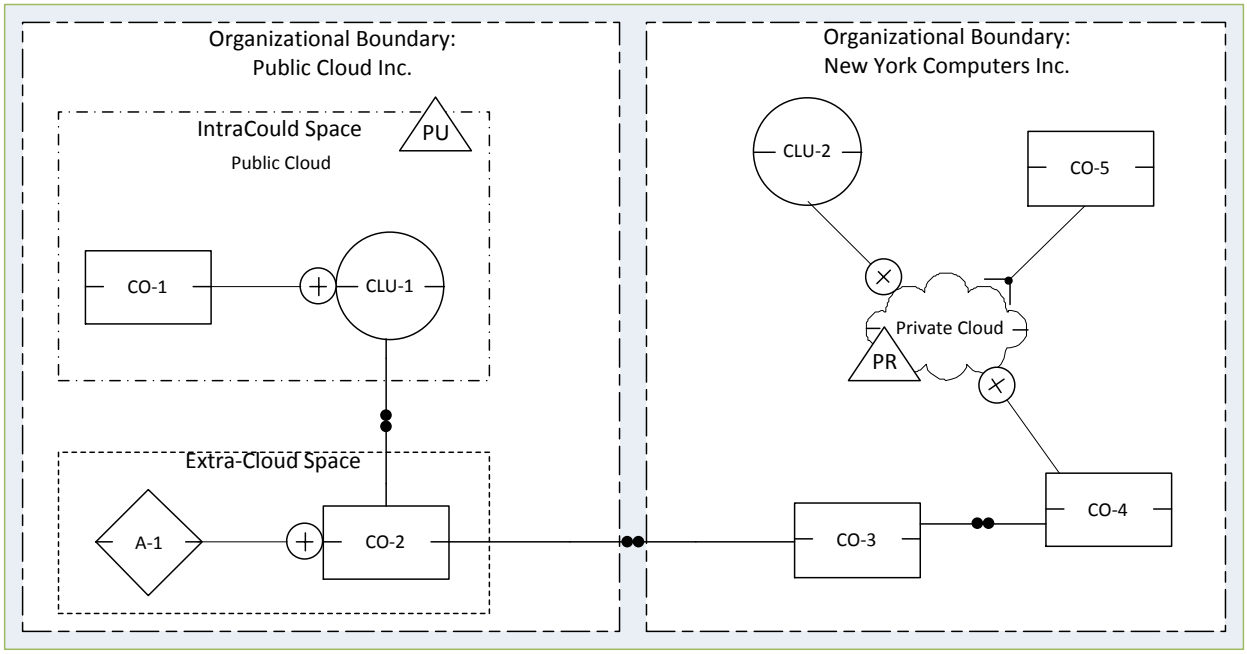

FIGURE 26: PUBLIC CLOUD AND PRIVATE CLOUD INTERACTIONS ACROSS ORGANIZATIONAL BOUNDARIES

Methodologies Corporation, All Rights Reserved © 2008-2011